ARTEKIT
ELECTRONIC ARTISTS
www.artekit.eu

# AK-AT42QT1010 - Capacitive Touch Button

## SCHEMATIC DIAGRAM REVISION 1.0

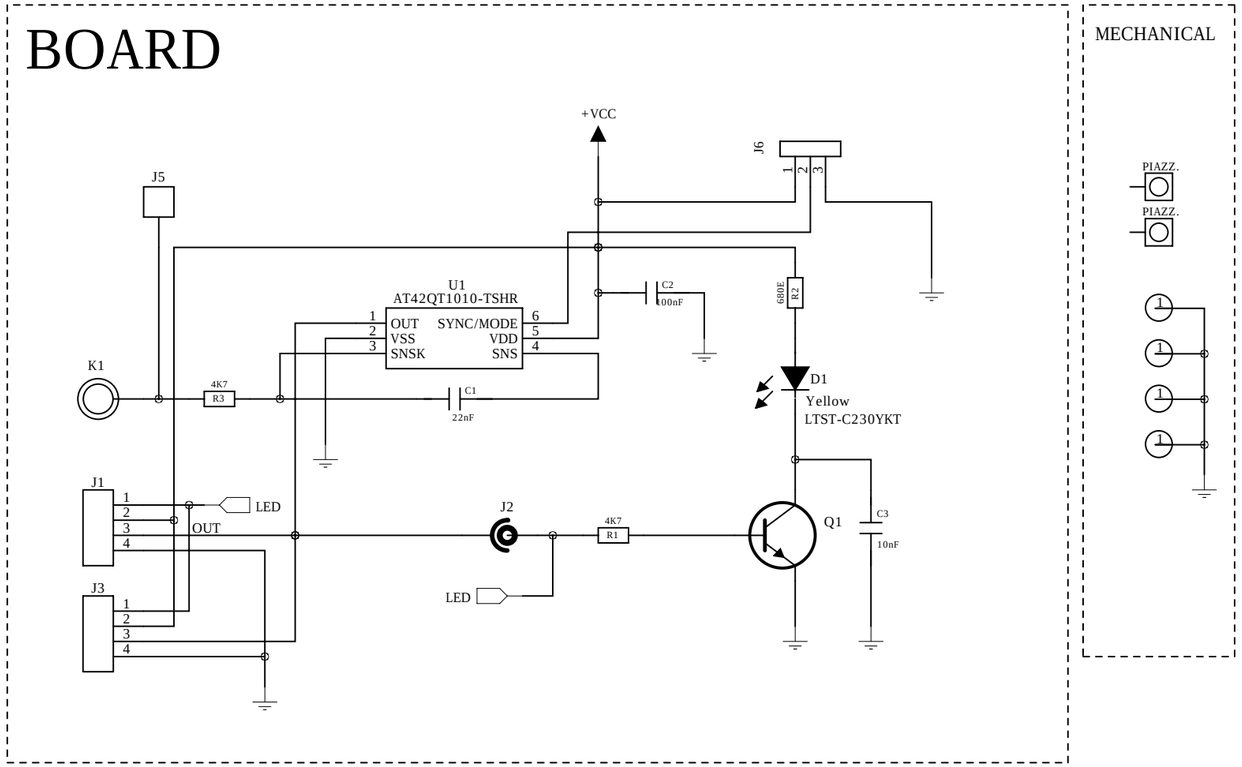


For more information: www.artekit.eu
NOTE: This board was designed and produced in Italy

## Design Disclaimer

Artekit Italy ("ARTEKIT") provides this design as a service to our customers. Artekit has made a good faith attempt to build for the specifications provided or needed by the customer. Artekit provides this product "as is" and without "recourse" and MAKES NO WARRANTY, EXPRESSED, IMPLIED OR OTHERWISE, INCLUDING ANY WARRANTY OF MERCHANTABILITY AND FITNESS FOR A PARTICULAR PURPOSE.

| | | | |
|---|---|---|---|
| ARTEKIT electronic artists | | COMPANY: | ARTEKIT ITALY |
| | | TITLE: | AK-AK-AT42QT1010 |
| DRAWN: RHM | DATED: 28/12/2014 | SIZE: B | Capacitive Touch Button — REV: |
| CHECKED: IBM | | | |
| RELEASED: RHM/IBM | DATED: 28/12/2014 | SCALE: 1/1 | SHEET: 1 OF 1 |