WaveTooEasy
SCHEMATIC DIAGRAM REV 1.2
For more information: www.artekit.eu

Released under the Creative Commons
Attribution Share-Alike 3.0 License
http://creativecommons.org/licenses/by-sa/3.0

This board was designed and produced in Italy

MCU ARM CORTEX M4

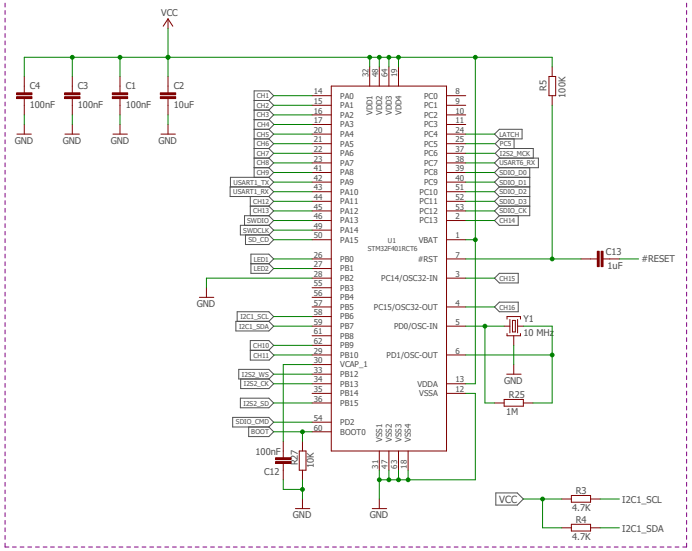

MECHANICAL

Fiducial Mark

Mounting Holes

MICRO SD

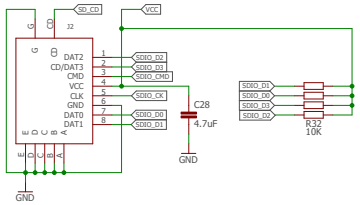

CODEC

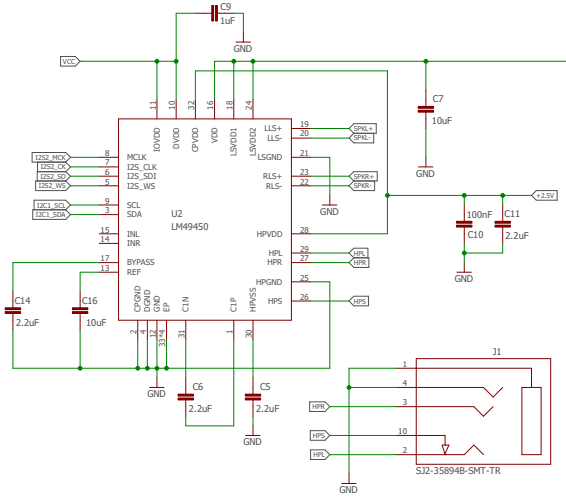

CONNECTORS

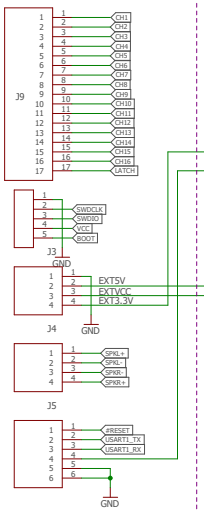

POWER

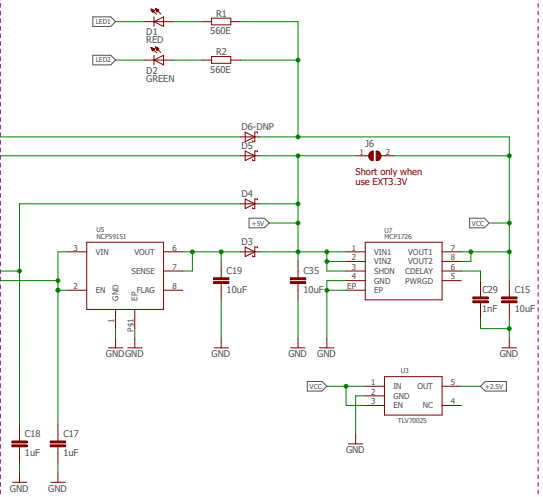

Design by	Ruben H. Meleca	ARTEKIT
Revision by	Ivan Meleca	WaveTooEasy_V1.2
Design data	JAN/11/2021	Revision: 1.2
Release data	AGO/13/2021	Sheet: 1/1